Receptacle, M12

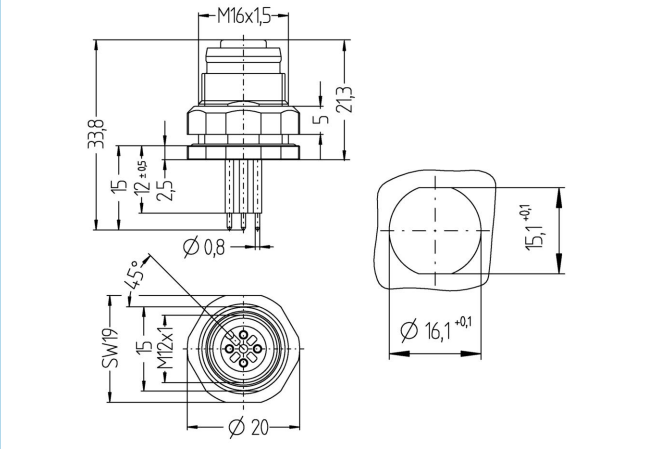

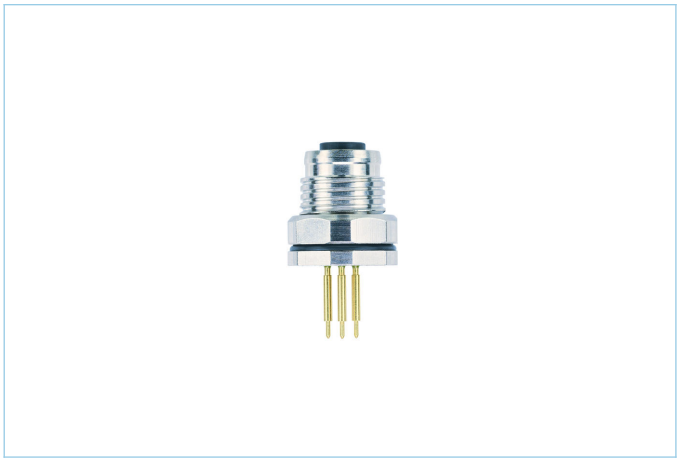

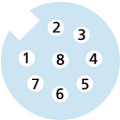

Product data	
Item description	EC-FKFDE8-P/16
Item-No.	8029510
Customs tariff-No.	85366990
Packaging unit	10
Step-File	EC-FKFDE8-P_16.stp
EAN	4047106000370

Technical data	
Connector	female, straight, M12
Number of pins	8
Pin assignment	1 WH, 2 BN, 3 GN, 4 YE, 5 GY, 6 PK, 7 BU, 8 RD
Coding	A
Rated voltage	30V
Current load per pin (at 40°C)	2A
Insulation resistance	≥10^8Ω
Ambient temperature product	-30°C...+90°C
Contact material	Metal, CuZn, gold-plated
Contact-carrier material	Plastic, PA GF, BK
Receptacle housing material	Stainless steel 1.4404
Sealing (female) material	FPM/FKM
Material of external sealing	NBR
Mounting direction	Back wall-mounting (incl. Fixing screw)
Connecting type	Print contact
Adjustable fixing screw	Yes
Fastening thread	M16x1.5
Standards	IEC 61076-2-101
Degree of protection (mounted)	IP65, IP67, IP68
Mechanical life-cycle	>100 mating cycles
Degree of pollution	3
Style	straight

The information contained in this data sheet was compiled with the utmost care. The liability for the correctness, completeness and timelines is limited to gross negligence.

Classification	
eCl@ss 6.0	27279220
eCl@ss 7.0	27440103
eCl@ss 8.0	27440103
eCl@ss 9.0	27440103
ETIM 5.0	EC002061
ETIM 6.0	EC002061